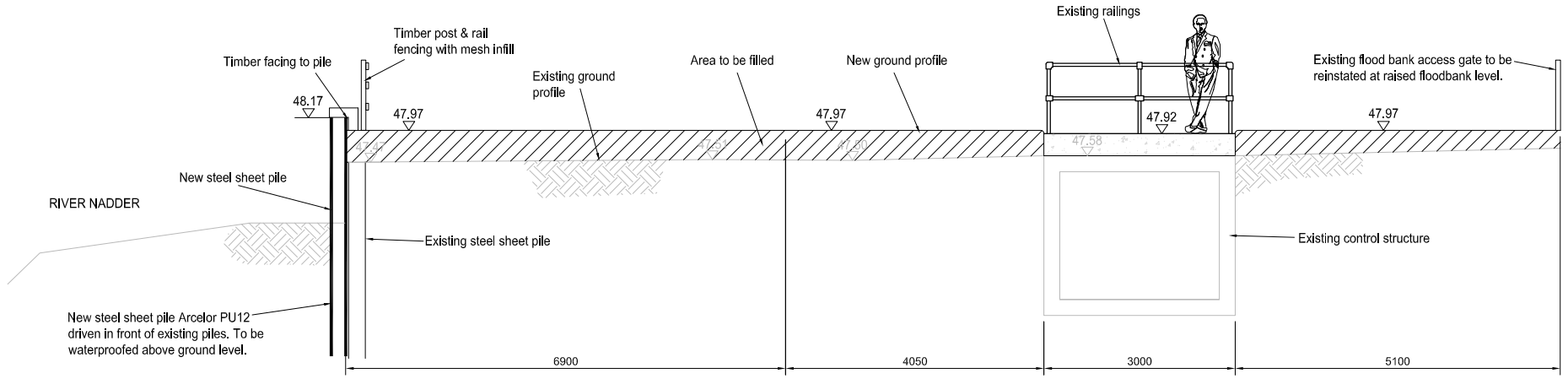

SECTION 32-A

SCALE 1:50 AT A1, 1:100 AT A3

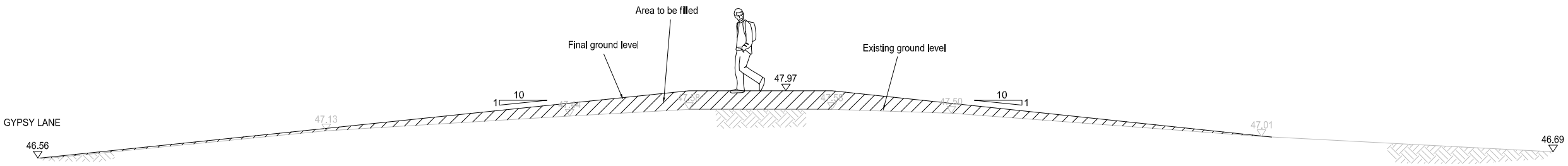

SECTION 32-B

SCALE 1:50 AT A1, 1:100 AT A3

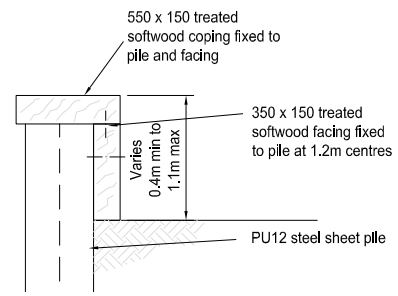

DETAIL OF PILE CAPPING

SCALE 1:20 AT A1, 1:40 AT A3

0 0.5 1 2

SCALE 1:20 (A1) METRES
SCALE 1:40 (A3)

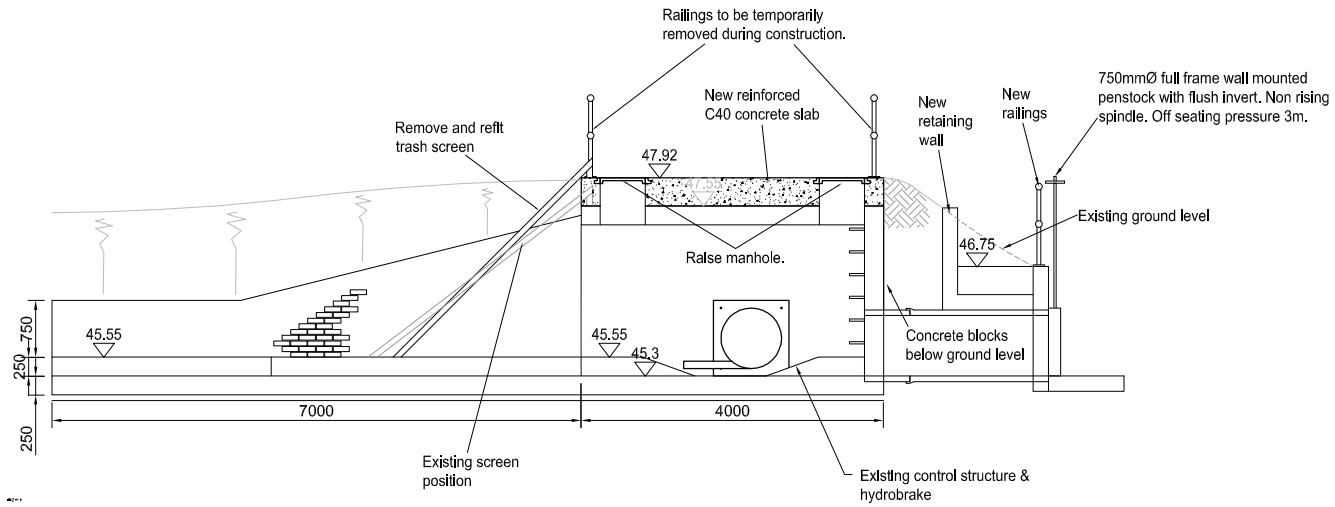

SECTION 32-C
MODIFICATION TO CONTROL STRUCTURE

FOR APPROVAL

0 1000 2000 3000 4000 5000

SCALE 1:50 (A1) MILLIMETRES
SCALE 1:100 (A3)

Key:

47.01 Existing ground levels

46.69 Proposed ground levels

Imported fill material

Notes:

1. All dimensions shown are in mm unless otherwise stated.
2. All levels shown are in mAOD.
3. Banks to have 100mm final depth of topsoil & seed.
4. Vegetation to be cleared from works and working area prior to construction.
5. Sheet piles installed to 1:200 yr + 20% = 48.17m Flood defence level 47.78m
6. Banks to be constructed to 50mm above flood level to allow for settlement.

Rev	By	Chkd	Apprvd	Date	Description
A	MG	NJC	RPC	29/08/06	Planning Application

Client

Environment Agency

Halcrow Group Limited
Ash House, Falcon Road, Sowton, Exeter, EX2 7LB
Tel. +44 (0) 1392 444252 Fax. +44 (0) 1392 444301
Exeter@halcrow.com
www.halcrow.com

Halcrow

Project

HARNHAM
FLOOD DEFENCE SCHEME

Drawing

GYPSY LANE/MIDDLE STREET
FLOOD BANK DETAILS
(SHEET 1 OF 2)

Drawn by: ARW Date: 11/08/06
Checked by: NJC Date: 11/08/06
Approved by: RPC Date: 11/08/06

Drawing No. WN/HHAM/321
Revision A

Drawing Scale: AS SHOWN

Drawing file path & name: - Vinfoms/pw files/ncth